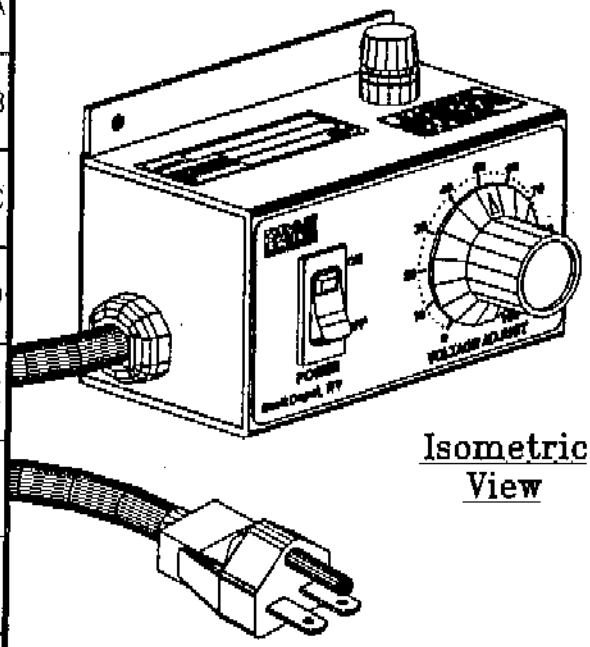

Isometric View

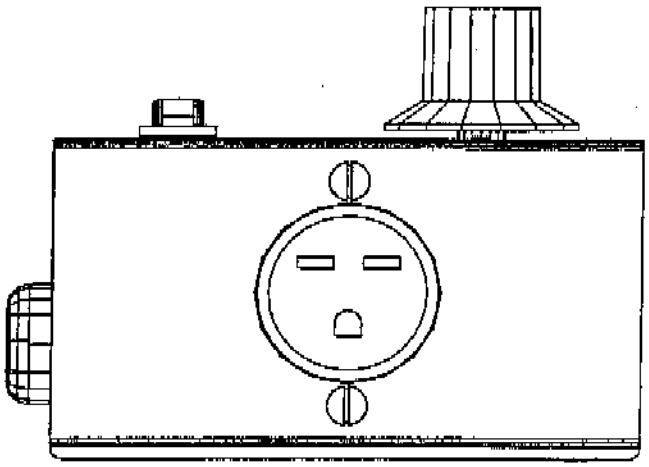

Bottom View

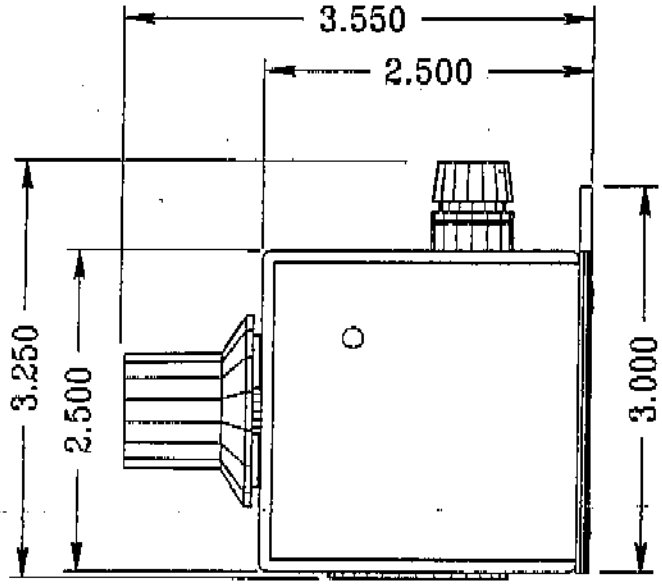

Right Side View

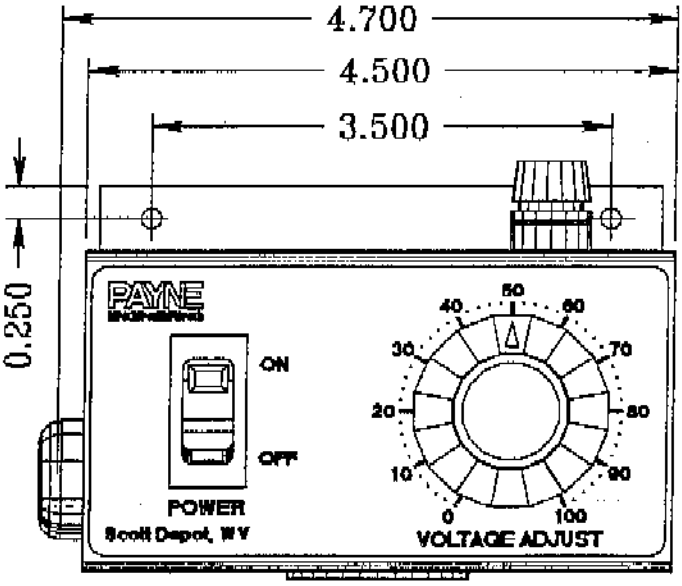

Front View

Dwg. No.	18T/12.007

MODEL 18TP-2-5/10
PORTABLE
SOLID STATE
POWER CONTROL
3D model

PAYNE ENGINEERING

Drn By:		02/03/95
App By:		/ /

Box 70, Scott Depot, W.Va. 25560 PH 304/757-7353
CABLE-PAYNENGRG TELEX 88-5452 FAX 304/757-7305

Rev.	ORIGINAL	/